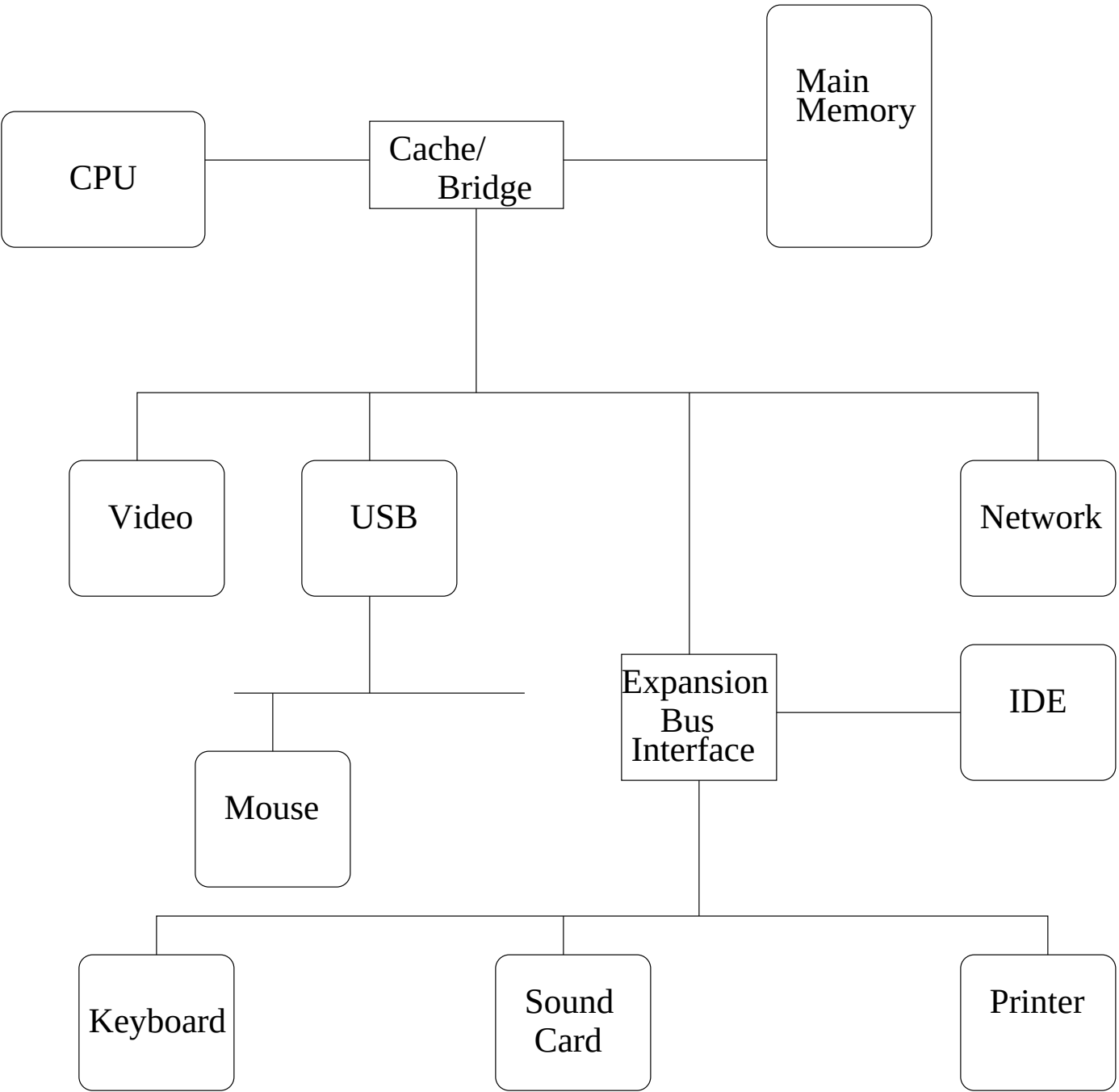
CPU
Cache/
Bridge
Main
Memory
Video
USB
Network
Expansion
Bus
Interface
IDE
Mouse
Keyboard
Sound
Card
Printer