Repeated Sequence and Palindrome Detection...

Problem Specifications

Following *string matching*, two more string analysis problems occur commonly in bioinformatics applications: *repeated sequence detection* and *palindrome detection*. Both problems are introduced below.

Maximal repeated pairs. A *maximal pair of repeated strings* or a *maximal repeated pair* in a string $S = s_1 \dots s_n$, is a pair of identical substrings $P_1 = s_i \dots s_{i+m}$ and $P_2 = s_j \dots s_{j+m}$, $P_1 = P_2$, which start at different positions in S (i.e., $i \neq j$), such that $s_{i-1} \neq s_{j-1}$ and $s_{i+m+1} \neq s_{j+m+1}$.

A *maximal repeated pair* can be represented as a triple $\langle i, j, m \rangle$ where i and j are starting positions of the substrings P_1 and P_2 and m is the length of P_1 and P_2. Given a string S, the set of all maximal repeated pairs is denoted $\mathcal{R}(S)$.

Palindromes. A string $P = p_1 \dots p_k$ of even length k is called a *palindrome* if $p_1 = p_k$, $p_2 = p_{k-1}$, $\dots p_{k/2} = p_{1+k/2}$. A string of odd length $P = p_1 \dots p_k$ is a *palindrome* if $p_1 \dots p_{(k-1)/2} p_{(k-1)/2+1} \dots p_k$ (i.e., an even-length string constructed out of P by taking out the mid-point character) is an even-length palindrome.

Meaningful palindromes exist in all human languages. Examples of palindromes in English are `"dud"`, `"madam"`, `"never odd or even"`, `"some men interpret nine memos"`, `"don't nod"`, `"may a moody baby doom a yam"` and `"no, it never propagates if I set a gap or prevention"`.

DNA palindromes. In a DNA, a palindrome definition is somewhat different. A *complimented DNA palindrome* is a string $S = s_1 \dots s_m$ in the $\{A, T, C, G\}$ alphabet with the *compliment* relation defined as $compliment(A) = T; compliment(T) = A; compliment(C) = G; compliment(G) = C$, where:

- if m is even: $s_1 = s_m$, $s_2 = s_{m-1}$, $\dots p_{m/2} = p_{1+m/2}$.
- if m is odd: $s_1 = s_m$, $s_2 = s_{m-1}$, $\dots p_{(m-1)/2} = p_{1+(m-1)/2}$.

Complimented palindromes play an important role in DNA: such sequences appear often in various *regulatory DNA sequences*. Also, complimented palindromes may form *hairpin* structures on a single DNA strand: nucleotides on

each strand, rather than binding to the complimentary nucleotide on the opposite strand bind to the complimentary nucleotide of the complimentary palindrome.

Often, palindromes in DNA come with *gaps*. A *gapped complimentary DNA palindrome* is a string $S = P_1QP_2$, such that P_1P_2 is a complimentary palindrome, and $Q = q_1 \dots q_k$, and $q_1 \neq compliment(q_k)$.

A *maximal palindrome substring* in string $S = s_1 \dots s_n$, is a string $P = s_i \dots s_j$, such that P is a palindrome, and $s_{i-1} \neq s_{j+1}$.

A *maximal (gapped) complimentary DNA palindrome substring* in string $S = s_1 \dots s_n$ from the $\{A, T, C, G\}$ alphabet is a string $P = s_i \dots s_j$, such that P is a (gapped) complimentary DNA palindrome, and $s_{i-1} \neq s_{j+1}$.

Maximal repeat detection problem. Given a string $S = s_1 \dots s_n$ find all strings P that are maximal repeated strings in S.

Example. Consider a string $S =$`ATTGATTCATTC`. This string has two maximal repeated strings: `ATT` and `ATTC`. `ATT` is represented by two triples: $\langle 1, 5, 3\rangle$ and $\langle 1, 9, 3\rangle$. `ATTC` is represented by a single triple $\langle 5, 9, 4\rangle$. Note, that according to our definition of a maximal repeat, $\langle 5, 9, 3\rangle$ does not form a maximal repeated sequence.

Note also, that despite the fact that `ATT` is a substring of `ATTC`, the output of an algorithm solving the **maximal repeat detection problem** must contain both.

Maximal palindrome detection problem. Given a string $S = s_1 \dots s_n$, find all maximal palindromes in it.

Maximal DNA palindrome detection problem. Given a string $S = s_1 \dots s_n$ in the $\{A, T, C, G\}$ alphabet, *find all* ***maximal complimentary DNA palindromes*** in it.

Efficient Algorithm for Maximal Repeated String Detection

We use **suffix trees** to construct an efficient algorithm for determining all maximal repeated strings. The algorithm is based on the following observation:

Lemma (Maximal repeats). Let $T(S)$ be a suffix tree of a string S. Let P be a maximal repeated string in S. Then there exists an *internal node* v in $T(S)$ whose path label is exactly P.

The corollary to this lemma is useful for evaluation of our algorithm:

Theorem. A string S of length n can have no more than n maximal repeats.

This is so, because there are no more than n internal nodes in $T(S)$.

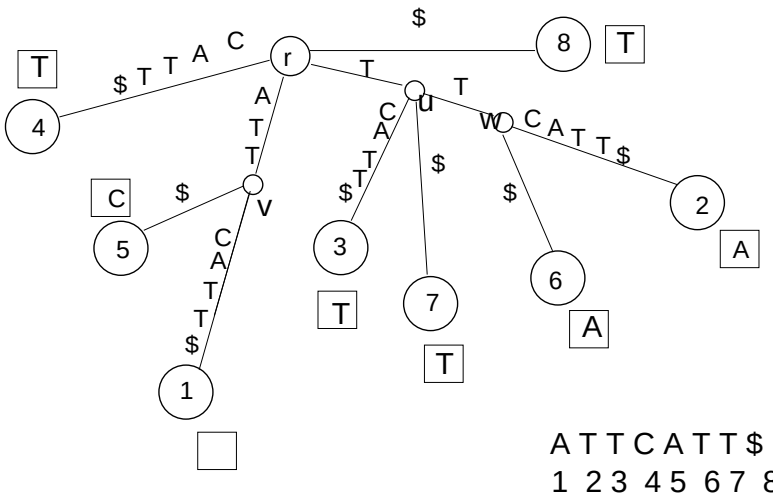

Figure 1: Illustration of left-diversity in suffix trees.

Definition. Let $S = s_1 \dots s_n$ be a string. A character s_{i-1} is called the *left character* for position i in S. A node v in $T(S)$ is called ***left diverse*** if at least two leaves in v's subtree have different left characters.

Example. Consider a string $S =$ `ATTCATT`. The suffix tree $T(S\$)$ is show in Figure **??** together with the left character (in a square box) for each leaf node (a.k.a, position in the string). Based on the definition of *left diversity*, of the three internal nodes, v, u and w, two, v and u are *left diverse*, while w is not.

Example. Consider the same string $S =$ `ATTCATT`. We can see that there are two distinct maximal substrings in S: `ATT`, represented by a triple $\langle 1, 5, 3\rangle$ and `T`, represented by triples $\langle 2, 3, 1\rangle$, $\langle 6, 7, 1\rangle$, $\langle 2, 7, 1$ and $\langle 3, 6, 1\rangle$.

These two substrings, correspond exactly to the path labels of two nodes in $T(S)$: `ATT` is a path label of node v, while `T` is a path lable of node u.

We notice that v and u are the two *left diverse* nodes in $T(S\$)$.

This is NOT a coincidence.

Theorem (left diversity). A string P is **a maximal repeated string** in a string S, **iff** the node in $T(S)$ with path label P **is left diverse**.

The set of all left **maximal repeats** in a string S can be represented as a subtree of $T(S)$ (or of $T(S\$)$) which contains the paths to all the deepest (otherwise known as *frontier*) left diverse nodes. This is a *compact* representation, as it requires at most n nodes and n edges.

Finding left diverse nodes in a suffix tree. We assume that the algorithm is given the string S, its size n and the suffix tree $T(S\$)$ as inputs. The algorithm operates as follows.

- Perform a depth-first search traversal of $T(S\$)$.
- **Base case.** For each leaf node, record its *left character*.

- **Inductive step.** For each internal node v examine the labels of its children.
  - If at least one child is labeled as *left diverse* then label v as *left diverse*.
  - If no child is *left diverse*, then
    * If all child labels *coincide* (i.e., are the same), set the label of v to be the same.
    * If at least two children have different labels then set the label of v to be *left diverse*.
- **Pruning.** Delete from $T(S\$)$ all nodes that are NOT marked as *left diverse*. Return the remaining tree.

Analysis. The suffix tree $T(S\$)$ has the size $O(n)$, where n is the length of S. Depth-first search traversal visits each node exactly once. There are $O(n)$ nodes with a parent in $T(S\$)$. The label of each such node is considered exactly once during the induction step. Any non-left diverse node in the tree can be deleted *immediately after its label is considered* during the induction step for its parent. Therefore, the running time of this algorithm is $O(n)$.

Palindrome detection: preparation

Before we introduce the palindrome detection algorithm, we need to discuss one more notion, *generalized suffix trees* and two problems, algorithms for which are an important part of our palindrome detection method: **lowest common ancestor (lca) detection in trees** and **longest common extension** problem.

We introduce and discuss these problems below.

Generalized Suffix Tree

Definition. A **generalized suffix tree** is a suffix tree representing all suffixes of a set of strings $S_1, \ldots, S_N$.

Notes. In practice, all strings represented in the generalized suffix tree are going to be \$-terminated. Leaf nodes will now store multiple labels: one per string being processed. We encode each label as a pair: (i, j), where i is the ordinal representing the string, and j is the ordinal representing the position in that string.

Construction. Informally, a genalized suffix tree for a sequence $S_1, \ldots S_N$ of strings can be constructed as follows:

1. Construct $T(S_1\$)$.
2. Starting with $T(S_1\S)$, traverse each suffix of $S_2\$$ in it, and extend the tree where necessary. Add leaf labels to all leaf nodes you end at.
3. Repeat step 2 for S_3, $S_4, \ldots S_N$.

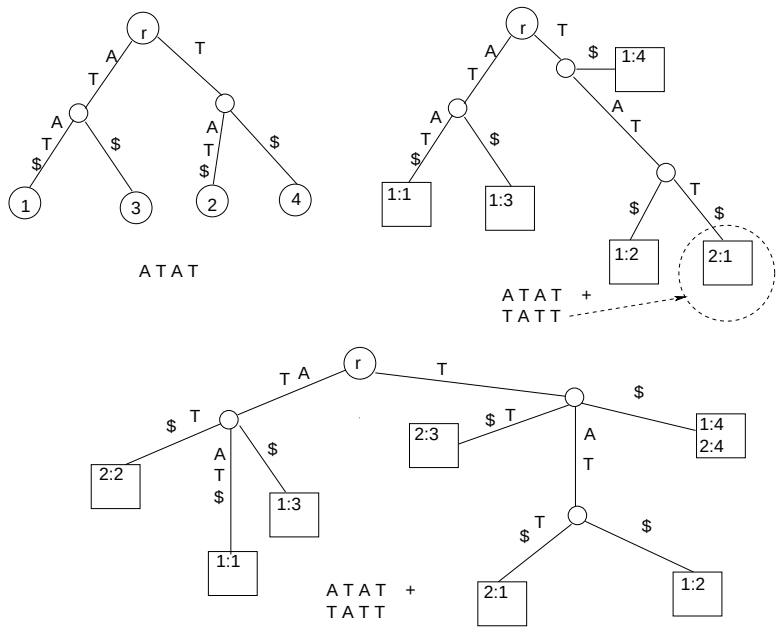

Figure 2: Transforming a suffix tree into a generalized suffix tree.

Example. Figure **??** shows the construction of the generalized suffix tree for a pair of strings $S_1 =$ `ATAT` and $S_2 =$ `TATT`. The top left tree is $T(S_1\$)$. On the top right tree, we performed insertion of the first suffix from S_2: `TATT`. (Arrow indicates new addition to the tree). The bottom tree is a full generalized suffix tree for the pair of strings S_1 and S_2.

Lowest Common Ancestor in Trees

Definition. In a tree T, the *lowest common ancestor (lca)* of two nodes x and y is the deepest node z that is an ancestor to both x and y.

The *lca* definition is illustrated in Figure **??**.

Naïve algorithm. Start from x and y, trace their ancestry in parallel until you hit a node that's the same.

Efficient algorithm. With some special preparation, the *lca* between two nodes in a tree can be found in constant time.

For *complete binary trees*, this is a matter of clever marking of the nodes with binary codes, and a bit-wise `XOR` operation between the codes of the two nodes.

For arbitrary trees, a mapping I from the nodes of the tree to the nodes of a *complete binary tree* can be developed, with the property that $I(lca(u), lca(v)) = lca(I(u), I(v))$.

Longest Common Extension

Problem definition. Given two strings $S_1 = s_1 \dots s_m$, $S_2 = t_1 \dots t_n$, and two numbers i, j, the *longest common extension* of S_1 at i and S_2 at j is a

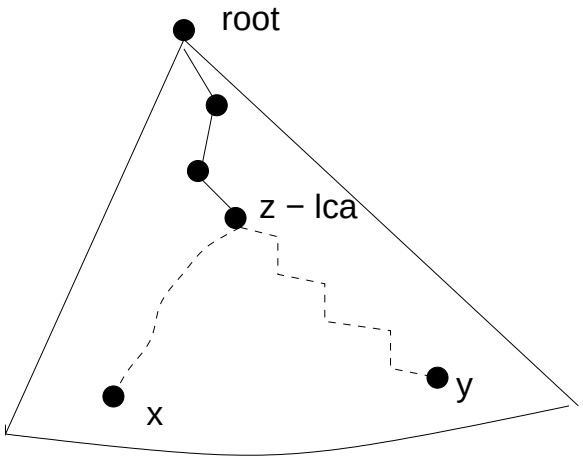

Figure 3: Illustrating the definition of lowest common ancestor: node z is the *lca* for nodes x and y.

string $P = p_1 \dots p_k$, such that $s_i \dots s_{i+k} = t_j \dots t_{j+k} = P$, but $s_{i+k+1} \neq t_{j+k+1}$ (or either $i + k = m$ or $j + k = n$).

Efficient algorithm. The longest common extension of two strings at two positions can be computed in constant time with linear pre-processing using the following algorithm:

1. Create a generalized suffix tree $T(S_1, S_2)$ and process it to allow *lca* queries.
2. Find nodes (leaves) v_i and v_j in $T(S_1, S_2)$ representing the suffixes $s_i \dots s_m$ and $t_j \dots t_n$.
3. Find $u = lca(v_i, v_j)$. Return the path label for u.

Palindrome detection

Idea. Let $S = s_1 \dots s_n$. Consider the string $S' = s_n \dots s_1$, i.e., $S' = reverse(S)$. The idea behind the linear-time algorithm for **even-length palindrome detection** is based on the following observation:

> Let S contain an even-length palindrome centered immediately after character s_q. Let the radius of this pa lindrome be k. Then the k characters starting at position $n - q + 1$ in string S' **are identical** to $s_q \dots s_{q+k}$.

Example. This is illustrated in figure **??**. We consider a string $S =$`ATCAACTGAT`. It has a palindrome $TCAACT$ centered right after position $q = 4$. The reverse of S, $S' =$`TAGTCAACTA`. Reverses preserve the palindrome. The three-letter extension of S at position $q + 1 = 5$ is ACT. Similarly, the three-letter extension at position $n - q + 1 = 7$ of S' is ACT - the reverse of the first half of the palindrome in S.

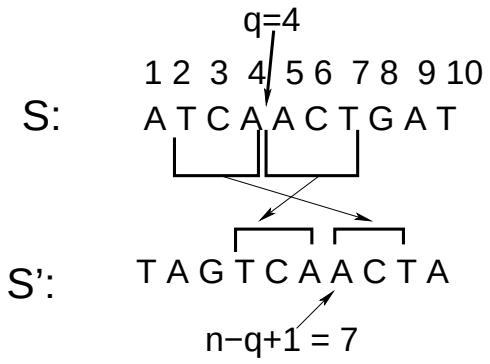

Figure 4: Illustrating the key idea of the palindrome detection algorithm for even-length palindromes. A palindrome can be found as the maximal common extension in S and $S' = reverse(S)$ at positions $q+1$ and $n-q+1$.

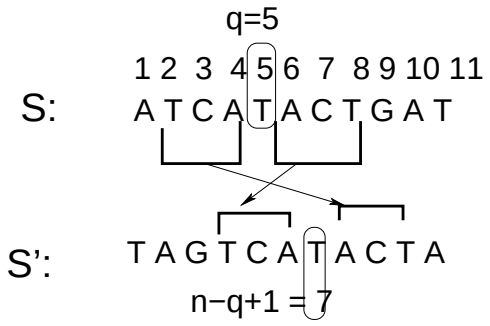

Figure 5: Illustrating the key idea of the palindrome detection algorithm for odd-length palindromes. A palindrome can be found as the maximal common extension in S and $S' = reverse(S)$ at positions q and $n-q+1$.

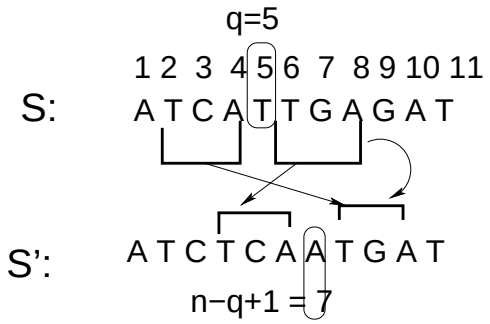

Figure 6: Illustrating the key idea of the palindrome detection algorithm for complimentary DNA palindromes. $S' = reverse(compliment(S))$.

Algorithm. We propose the following algorithm for **even-length palindrome detection**.

1. Given a string S, construct $S' = reverse(S)$.
2. Construct the generalized suffix tree $T(S, S')$.
3. For $q := 1$ to $n - 1$ do:
   (a) Let $x = LongestCommonExtension((S : q + 1), (S' : n - q + 1))$.
   (b) If $x > 0$, there is a palindrome of length $2x$ centered right after q in S.

Odd-length palindromes. For odd-length palindromes, we note the if there is a palindrome in S centered on position q, then the maximal extension of $(S : q)$ and $(S' : n - q + 1)$ is going to be equal to the central character of the palindrome followed by the "wing" of the palindrome (Figure **??**.

To detect odd-length palindromes, therefore, we check for $LongestCommonExtension((S : q), (S' : n - q + 1))$ and ensure that its length is greater than 1.

Complimentary DNA palindromes. To detect *complimentary DNA palindromes* instead of taking $S' = reverse(S)$, we set $S = reverse(compliment(S))$. Then continue as before. Figure **??** illustrates this idea.

References

[1] Dan Gusfield, *Algorithms on Strings, Trees and Sequences: Computer Science and Computational Biology*, Cambridge University Press, 1997.