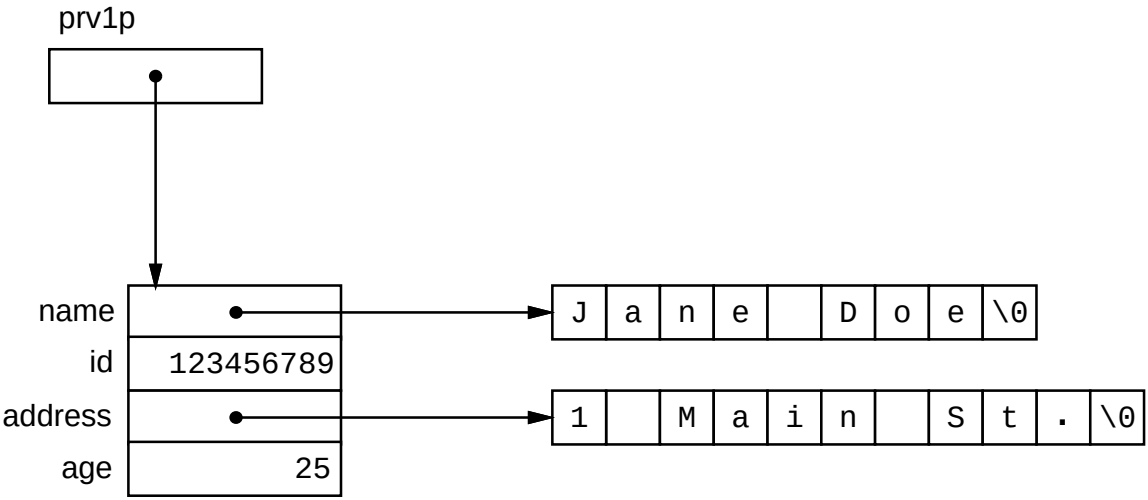
prv1p
name
id
address
age
123456789
25
J a n e D o e \0
1 M a i n S t . \0