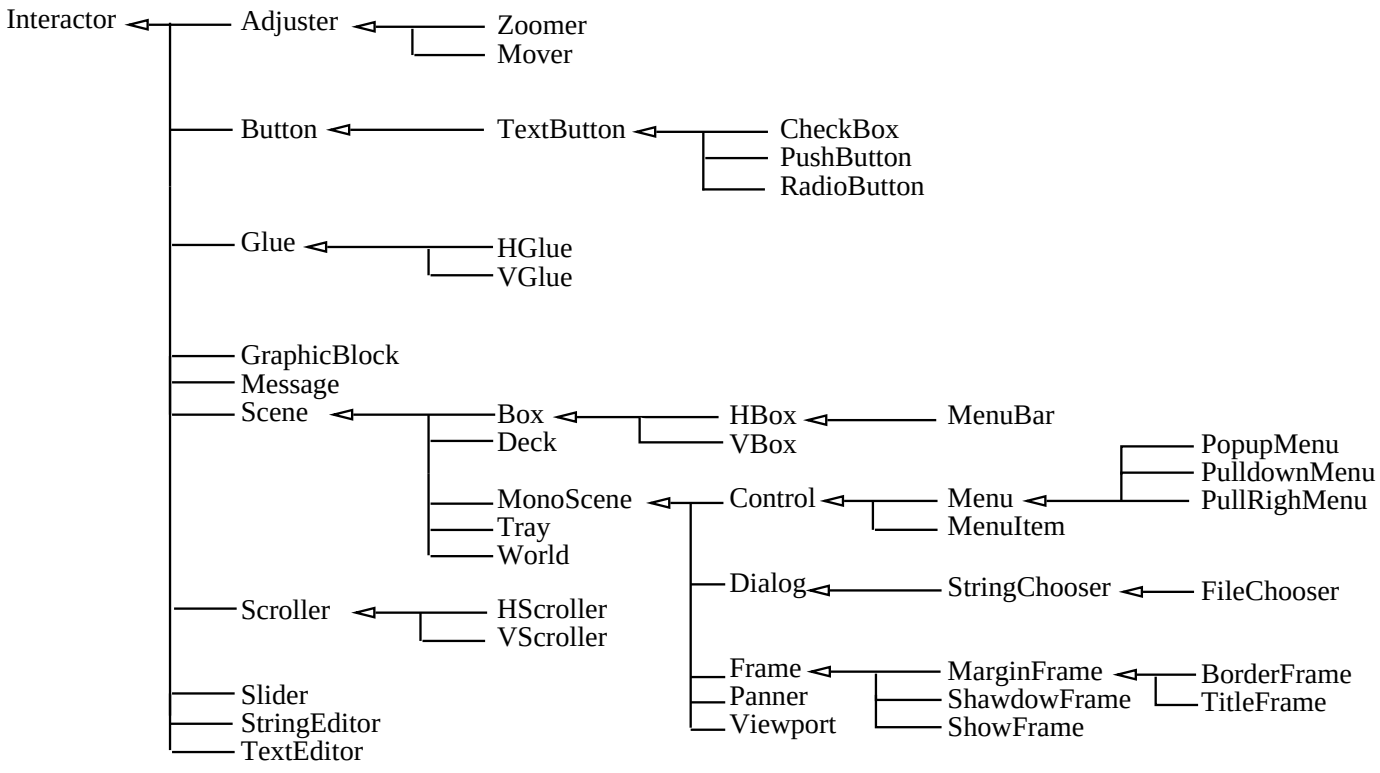
Interactor
Adjuster
Zoomer
Mover
Button
TextButton
CheckBox
PushButton
RadioButton
Glue
HGlue
VGlue
GraphicBlock
Message
Scene
Box
HBox
MenuBar
Deck
VBox
PopupMenu
PulldownMenu
PullRighMenu
MonoScene
Control
Menu
MenuItem
Tray
World
Dialog
StringChooser
FileChooser
Scroller
HScroller
VScroller
Frame
MarginFrame
BorderFrame
TitleFrame
Panner
ShawdowFrame
Viewport
ShowFrame
Slider
StringEditor
TextEditor

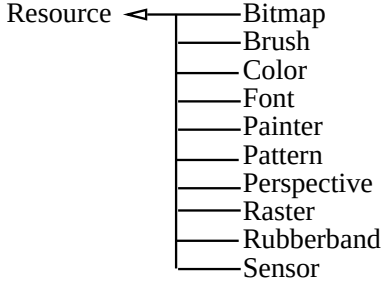
Resource
Bitmap
Brush
Color
Font
Painter
Pattern
Perspective
Raster
Rubberband
Sensor

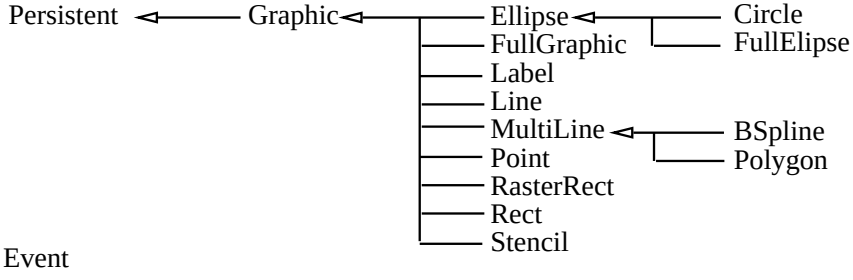
Persistent
Graphic
Ellipse
Circle
FullGraphic
FullElipse
Label
Line
MultiLine
BSpline
Point
Polygon
RasterRect
Rect
Stencil
Event