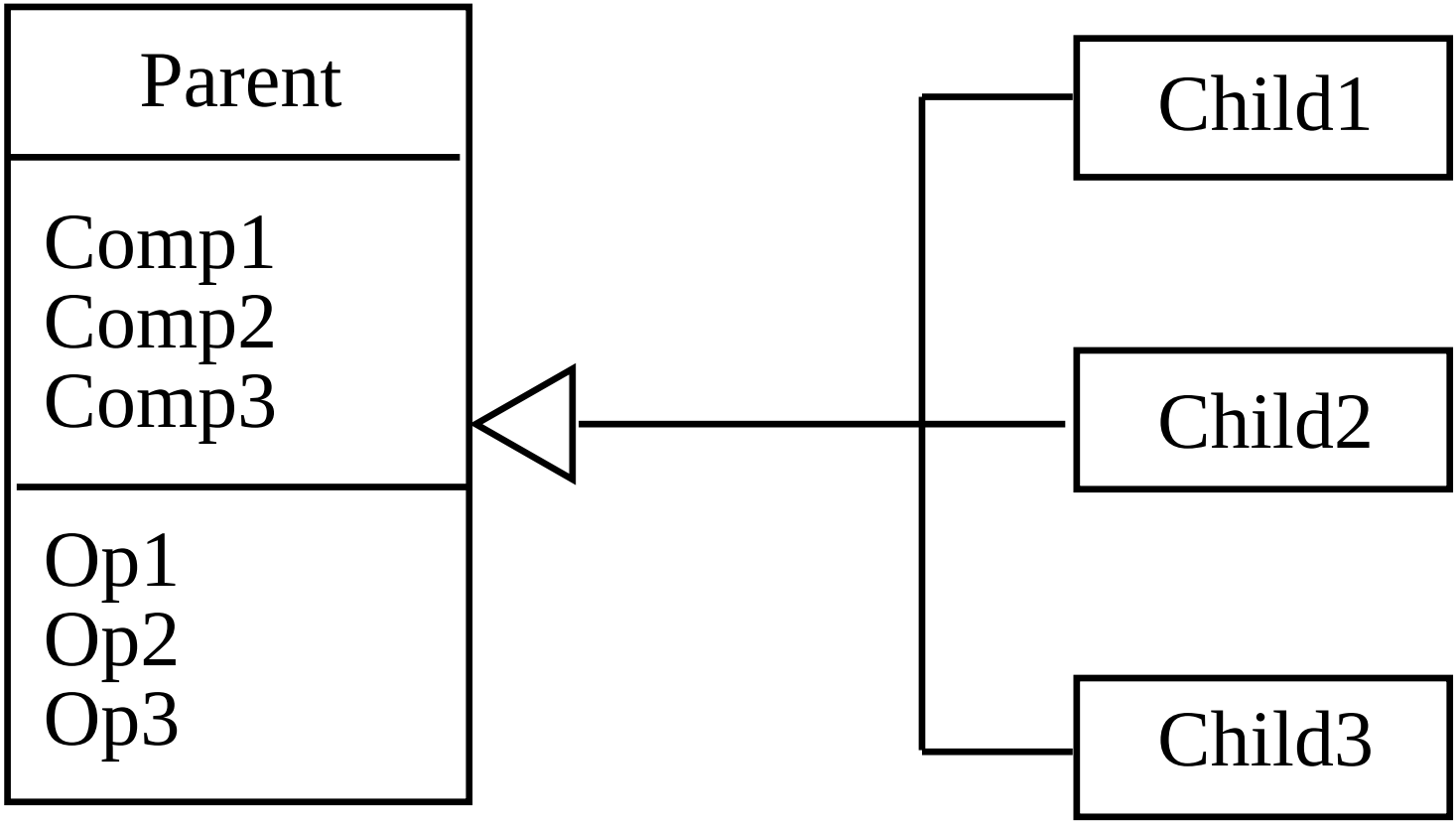Sample Class Diagram