Sample Class Diagram

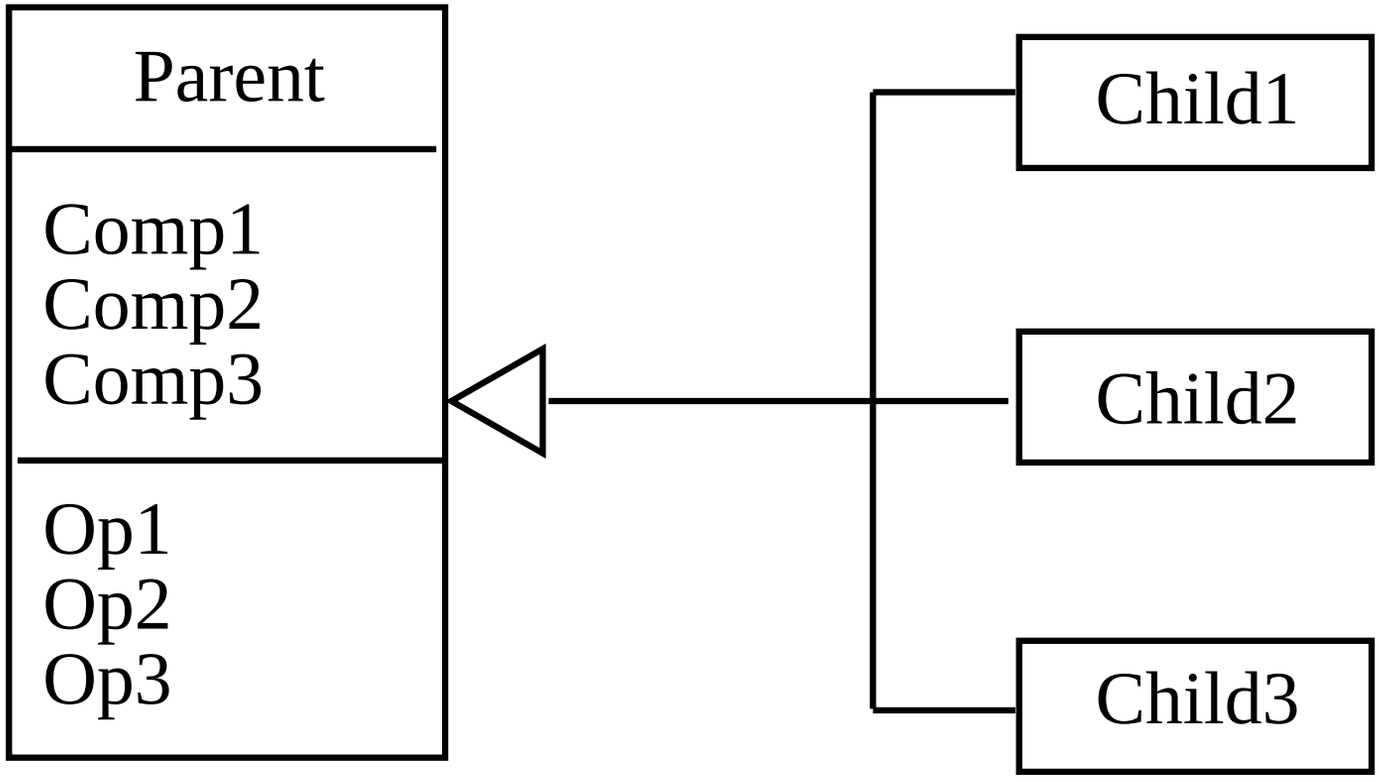

Corresponding SpecL:

```
object Parent is
    components: Comp1 and Comp2 and Comp3
    operations: Op1, Op2, Op3;
end Parent;

object Child1 inherits from Parent ...;
object Child2 inherits from Parent ...;
object Child3 inherits from Parent ...;
```