Level 1 Expansion:

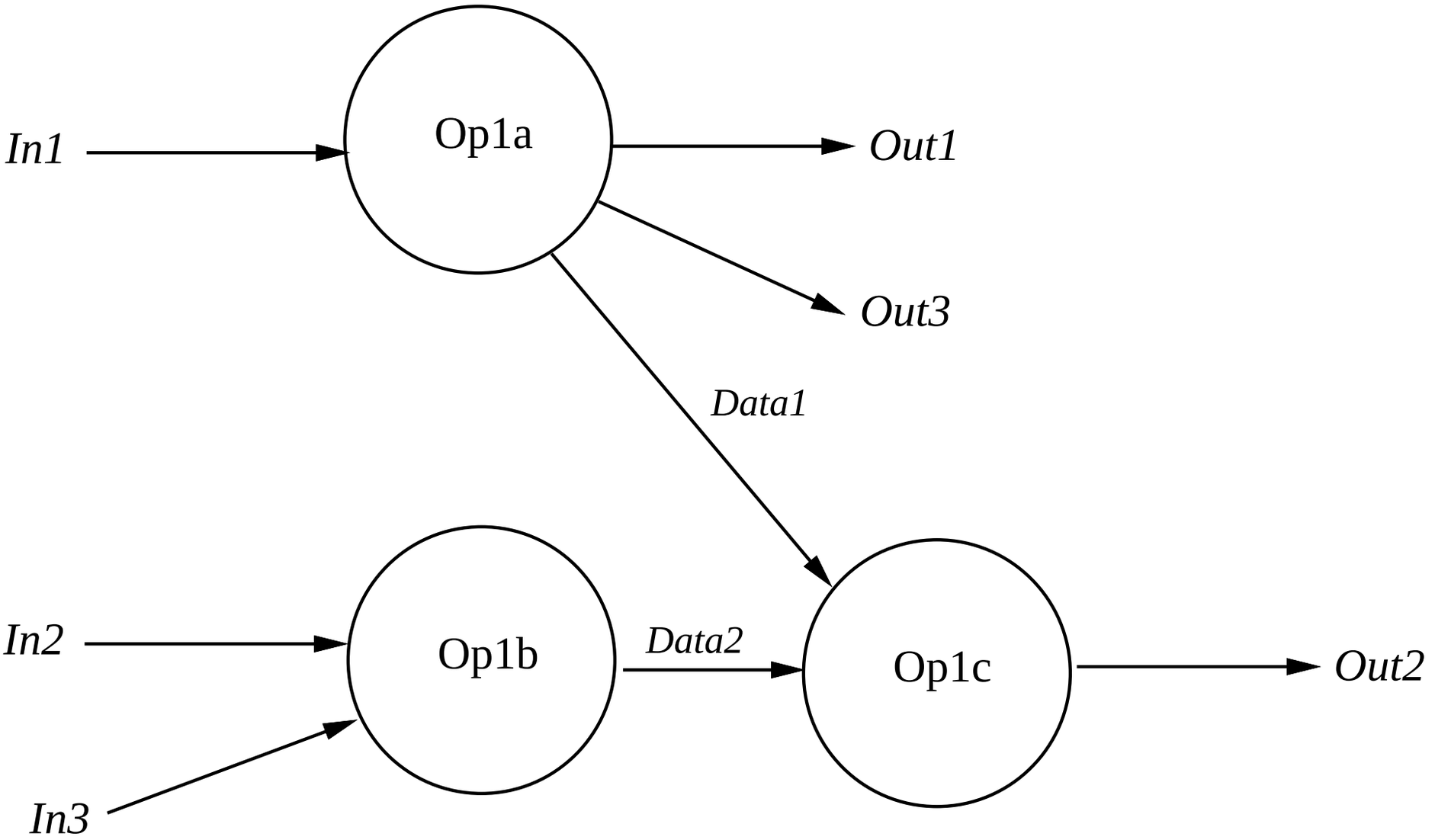

Corresponding SpecL:

```
operation Op1a(In1)->(Out1, Out3, Data1);
operation Op1b(In2, In3)->(Data2);
operation Op1c(Data1, Data2)->(Out2);
```