Top-Level Dataflow:

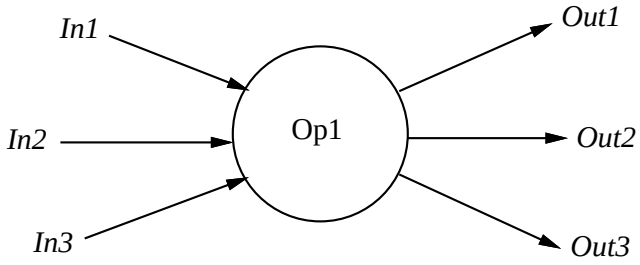

Corresponding SpecL:

```
object In1 is ...;
object In2 is ...;
object In3 is ...;
object Out1 is ...;
object Out2 is ...;
object Out3 is ...;
object Data1 is ...;
object Data2 is ...;
operation Op1(In1,In2,In3)->(Out1,Out2,Out3
  components: Op1a,Op1b,Op1c;
  dataflow:
    In1->Op1a.In1,
    In2->Op1b.In2,
    In3->Op1b.In3,
    Op1a.Out1->Out1,
    Op1a.Out3->Out3,
    Op1a.Data1->Op1c.Data1,
    Op1b.Data2->Op1c.Data2,
    Op1c.Out2->Out2
end;
operation Op1a(In1)->(Out1, Out3, Data1);
operation Op1b(In2, In3)->(Data2);
operation Op1c(Data1, Data2)->(Out2);
```
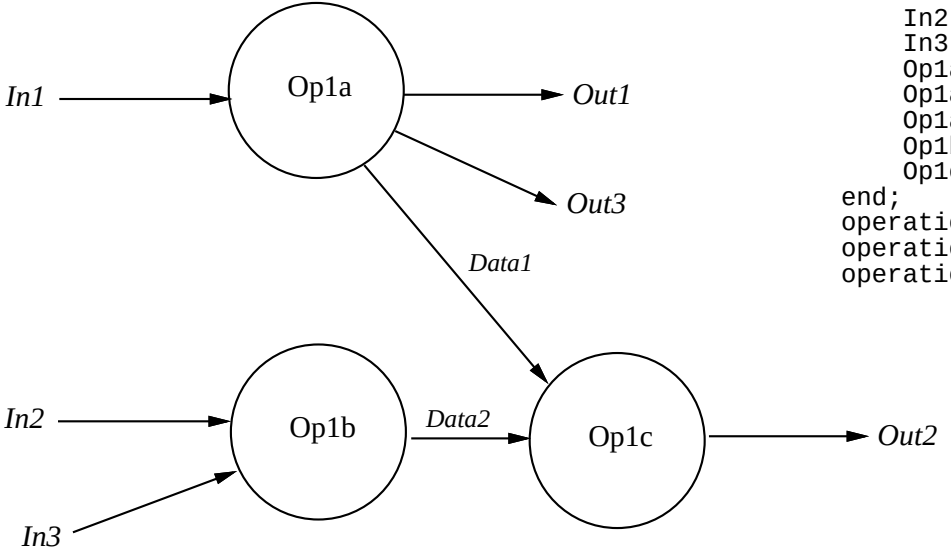
Level 1 Expansion: