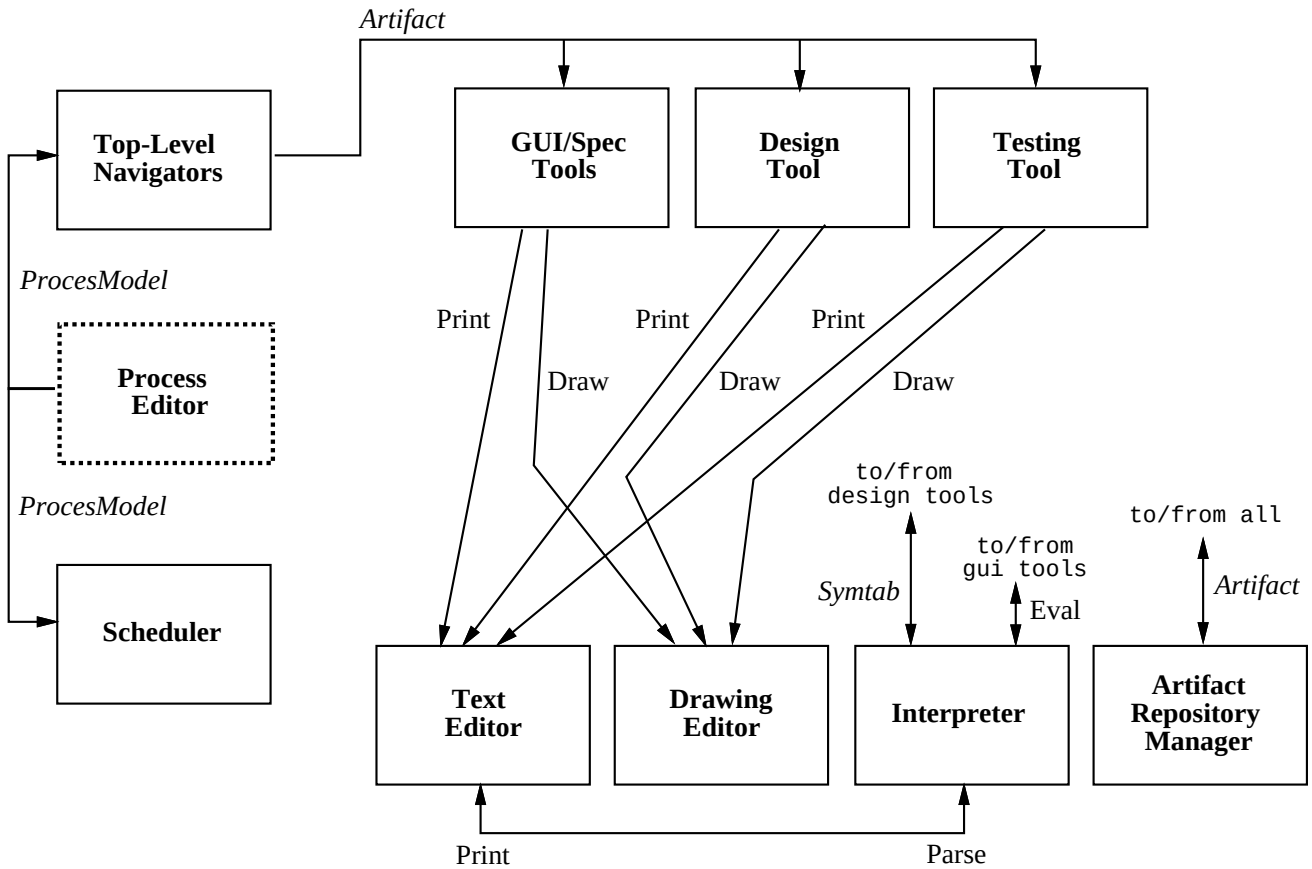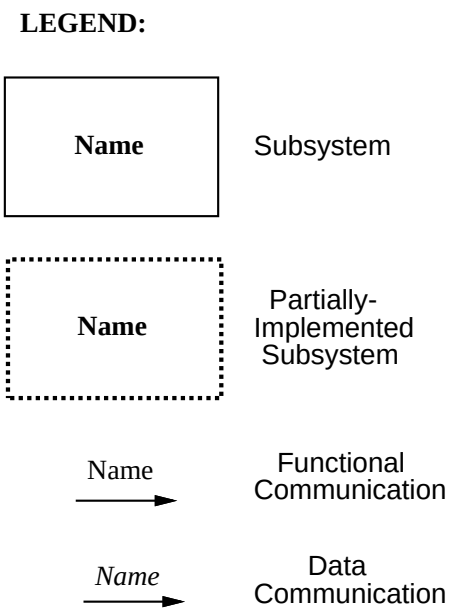Top-Level Enchilada Block Diagram