Sample Class Diagram:

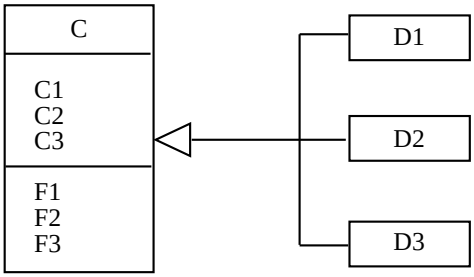

Corresponding RSL:

```
object C is
    components: C1, C2, C3;
    operations: F1, F2, F3;
end C;

object D1 inherits from C is ...
object D2 inherits from C is ...
object D3 inherits from C is ...
```

Corresponding Java Code:

```
class C1 {...}
class C2 {...}
class C3 {...}

class C {
  public void F1(...) {...}
  public void F2(...) {...}
  public void F3(...) {...}
  protected C1 c1;
  protected C2 c2;
  protected C3 c3;
};

class D1 extends C {...}
class D2 extends C {...}
class D2 extends C {...}
```

Alternative Equivalent Sample Class Diagram:

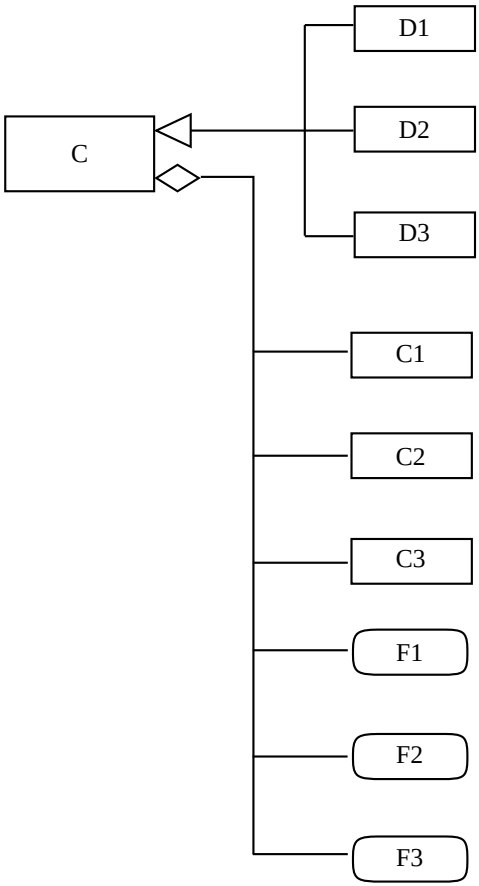

Corresponding C++ Code:

```
class C1 {...};
class C2 {...};
class C3 {...};

class C {
  public:
    void F1(...);
    void F2(...);
    void F3(...);
  protected:
    C1* c1;
    C2* c2;
    C3* c3;
};

class D1 : public C {...};
class D2 : public C {...};
class D2 : public C {...};
```