Sample Class Diagram:

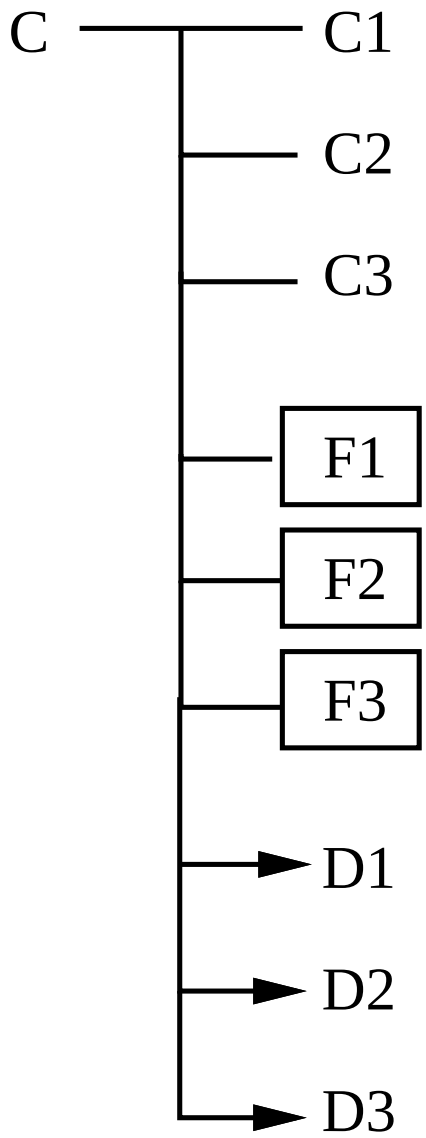

Corresponding C++ Code:

```
class C1 {...};
class C2 {...};
class C3 {...};
class C {
  public:
    void F1(...);
    void F2(...);
    void F3(...);
  protected:
    C1* c1;
    C2* c2;
    C3* c3;
};
class D1 : C {...};
class D2 : C {...};
class D3 : C {...};
```