A Graphical Modeling Notation with Similarities to UML

1. Introduction

The notation presented here is a general-purpose graphical format for modeling software artifacts. The notation is general purpose in that it can be used to model requirements, specification, design, and implementation artifacts. For our purposes, we use two formal textual languages for representing these artifacts. Namely, RSL is used to represent requirements and specifications; C++ is used to represent design and implementation. The same general-purpose graphical notation maps to both of these languages.

The notation presented here uses concepts from the Unified Modeling Language (UML). The design of UML is a collaborative effort of primarily commercial organizations, led by the Rationale Corporation. The goal for UML is to develop a standard graphical modeling notation. UML is consolidation of concepts used in the earlier Object Modeling Technique (OMT) and Booch Diagrams. The complete description of UML is available at `http://www.rational.com/uml/html/notation`

UML has a number of features that are not used in the notation described here. In addition, UML is missing certain features, notably function and dataflow diagrams. Where a feature is available in UML, the same feature is retained here. Where UML is missing what is considered to be an important notational feature, a previously existing standard is used, in such a way as not to conflict with any existing UML features. That is, if UML has it we'll use it; if UML does not have it we'll use a standard notation that does not conflict with any part of UML.

2. Block Diagrams

A block diagram represents communication between *subsystems*. Generally, a subsystem is a modular software component defined by more than a single class. The definition of subsystem is a *separately launchable executable program*, where the notion of launching is from the end-user's perspective.

Elements of a block diagram are the following:

1. Shadowed rectangles, representing subsystems
2. Directed interconnection lines, abstractly representing communication between subsystems
3. Graph labels in normal font, representing functional communication
4. Graph labels in italic font, representing data communication

That interconnection lines *abstractly* represent communication means that the implementation details of the communication are abstracted out. In particular, functional communication can be by normal procedure call, remote procedure call, subprocess invocation, thread activation, or some other means. This level of detail is *not* specified in the block diagram. Similarly, data communication can be by parameter passing, shared data, inter-process data transfer, or other means. This level of detail is not specified in the block diagram.

Figure 1 shows the general structure of a block diagram. The diagram depicts three subsystems in which Subsystem 1 calls (or otherwise invokes) Function 1 in Subsystem 2. Subsystem 2 sends (or otherwise transfers or shares) data *DataD1* to (with) Subsystem 1. Subsystems 1 and 3 send *DataD2* to each other.

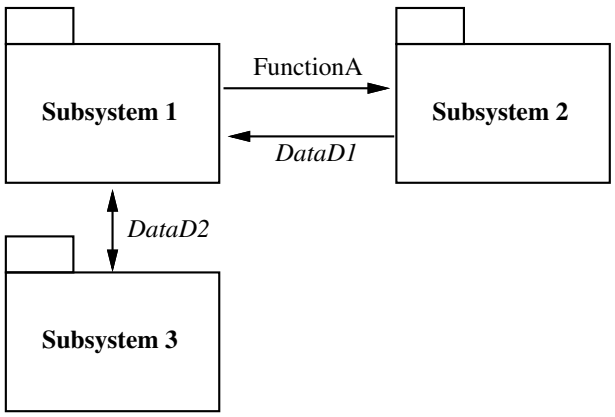

Figure 1: General Structure of a Block Diagram.

3. Dataflow Diagrams

A dataflow diagram represents the flow of objects between operations in a specification. Elements of dataflow diagrams are the following:

1. Circled graph nodes, representing operations.
2. Directed graph edges, representing operation inputs and outputs.
3. Graph levels, representing operation hierarchy.

Figure 2 shows the general structure.

4. Data Diagrams

A data diagram represents the composition and inheritance relationships between objects in a specification or classes in a design. The notation described here is largely a subset of UML, with a minor extension added. Elements of data diagrams are the following:

1. Three-part boxes, labeled at the top with a object/class name.
2. Object component/data member names, immediately below the class name in a box.
3. Declared operations/function member names, following the data member names in a box.
4. One-part boxes, labeled inside with the object/class name only.
5. Connecting edges between class boxes, with three forms of augmentation:
   a. a hollow triangle, designating an inheritance relation
   b. a hollow diamond, designating a composition relation (same semantics as the second part of a three-part box)
   c. integer or comma-separated integer pair annotation on hollow diamond, indicated multiplicity of composition; the character '*' can be used in place of an integer to represent multiplicity of 0 or more

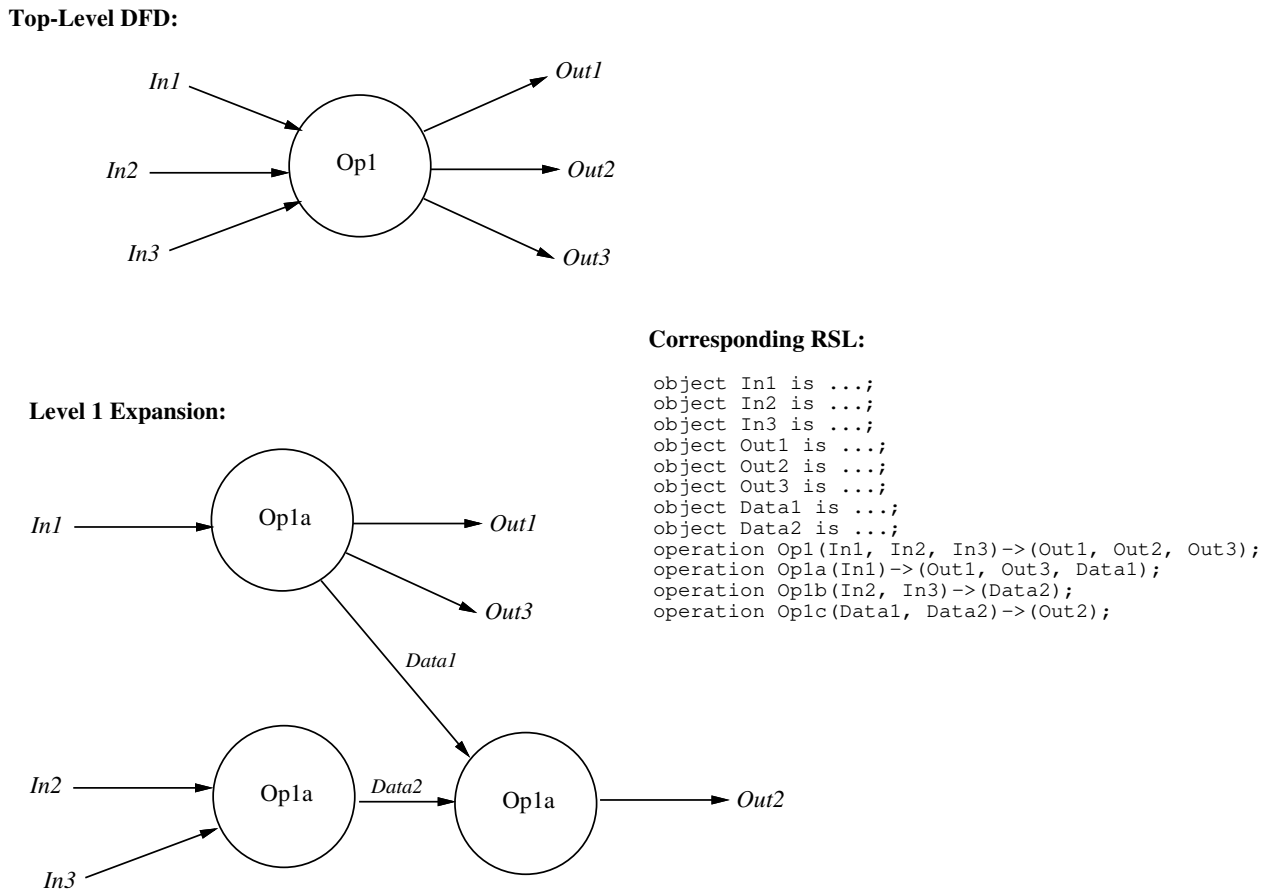

Figure 2: General Structure of a Dataflow Diagram.

d. no augmentation (i.e., a plain line), also designating a composition relation (this is not compatible with UML, but a nice feature I think).

Figure 3 shows the general structure. The diagram on the top of the figure shows data and function membership using the three-part box notation. The diagram on the bottom of the figure, labeled "Alternative Equivalent...", shows the equivalent membership relations using the hollow diamond notation. Note that function members, when shown outside of a three part class box, are drawn as rounded rectangles. This is consistent with their depiction in function diagrams, as discussed below.

Orientation of components in a data diagram is *not significant*. That is, subclasses and members can be shown in any geometric position relative to their parent class. The orientation of the hollow triangle is significant, with the pointed end oriented *towards* the parent class. Also, the positioning of the hollow diamond is significant, in that it is positioned *immediately adjacent* to the containing class. In this way, two-way containment can be depicted, as shown in Figure 4. Figure 4 also illustrates the use of

Sample Class Diagram:

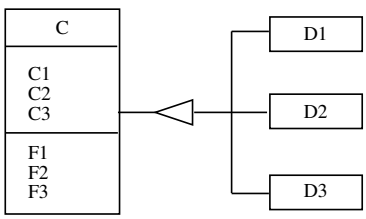

Alternative Equivalent Sample Class Diagram:

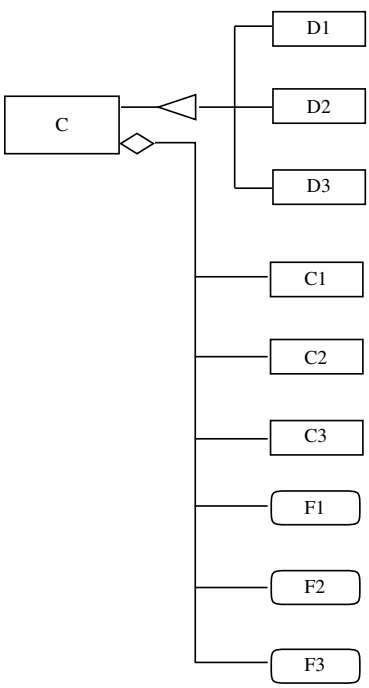

Corresponding RSL:

```
object C is
    components: C1, C2, C3;
    operations: F1, F2, F3;
end C;

object D1 inherits from C is ...;
object D2 inherits from C is ...;
object D3 inherits from C is ...;
```

Corresponding Java Code:

```
class C1 {...}
class C2 {...}
class C3 {...}

class C {
  public void F1(...) {...}
  public void F2(...) {...}
  public void F3(...) {...}
  protected C1 c1;
  protected C2 c2;
  protected C3 c3;
};

class D1 extends C {...}
class D2 extends C {...}
class D2 extends C {...}
```

Corresponding C++ Code:

```
class C1 {...};
class C2 {...};
class C3 {...};

class C {
  public:
    void F1(...);
    void F2(...);
    void F3(...);
  protected:
    C1* c1;
    C2* c2;
    C3* c3;
};

class D1 : public C {...};
class D2 : public C {...};
class D2 : public C {...};
```

Figure 3: General Structure of a Class Diagram.

multiplicity annotations.

Note that the three-part representation of membership versus the hollow diamond representation are two equivalent views that have exactly the same meaning. Membership can be shown in either way separately, or with the two forms combined into a single diagram. When the two forms are used in single diagram, there is redundant information shown -- i.e., a single diagram is showing the same membership relationships in two different ways. The notation does not prohibit such redundancy; it is up to the diagram designer to use the notation as she/he sees fit.

5. Function Diagrams

Function diagrams show the calling relationships between functions in a program design. Function diagrams are not applicable at the RSL specification level. Elements of a function diagram are the following:

1. Rounded rectangle nodes, representing functions
2. Edges between nodes, representing function calls
3. Annotated arrows above function nodes, representing input to and output from functions
4. Annotated down-pointing and up-pointing arrows, representing exception handling catch and throw, respectively
5. Labeled doubled lines, representing event invocation
6. Labeled dashed-line boxes around function nodes, representing class membership.

Figure 5 shows the general structure.

The calling relationship shown in a function diagram shows *potential invocation* not actual invocation. Depending on the implemented logic within a calling function, none, some, or all of its potentially called functions may actually be called during program execution.

Orientation of components in a function diagram is *is significant*. The root of a calling tree must be shown above or to the left of the subfunctions that it calls. Similarly, an event invocation line must be shown above or to the left of the functions that may be invoked when the event is triggered.

Strictly speaking, the left-to-right (or top-to-bottom) order of called functions is not significant. However, by convention the left-to-right order in a function diagram will typically be the same as the lexical order of appearance of the functions in the C+- code.

6. Discussion

The shape of a diagram node is unique across all diagrams. Furthermore, the node shape can be traced to a specific semantic construct in RSL and/or C++. Viz.,

Sample class diagram:

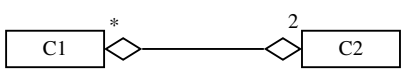

Corresponding RSL:

```
object C1 is C2 and C2;
object C2 is C1*;
```

Corresponding Java:

```
class C1 {
    C2 c2a;
    C2 c2b;
};

class C2 {
    C1List C1;
};
```

Figure 4: Two-Way Membership in a Class Diagram.

Sample Function Diagram:

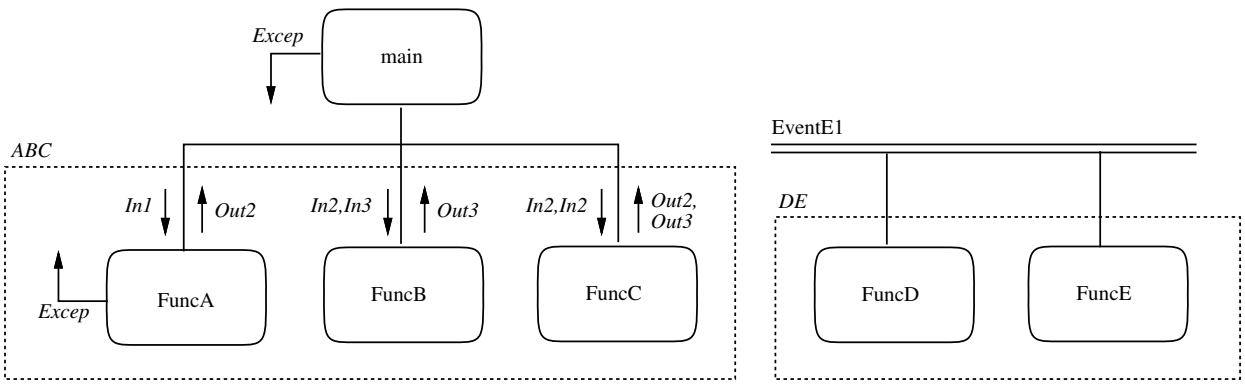

Corresponding Java Code:

```
class Excep extends Exception {...};

class ABC {
    public Out2 FuncA(In1) {
        ...
        throw (new E);
        ...
    }
    public Out3 FuncB(In2, In3) {...}
    public Out2 FuncC(In2, In2, Out3) {...}
};

class DE {
    public void FuncD() {...}
    public void FuncE() {...}
};

...

ABC::FuncA(In1* in1) {
    ...
    throw (new E);
    ...
}

...
```

```
public static void main() {
    static ABC abc = new ABC;
    static DE de = new DE;
    static Out1 out1;
    static Out2 out2a, out2b;
    static Out3 out3;
    ...

    try {
        out2a = abc.FuncA(in1);
    }
    catch (Excep e) {
        ...
    }
    ...
    out3 = abc.funcB(in2, in3);
    ...
    out2b = abc.funcC(in2, In2);
    ...
    bindFunctionToEvent(DE.FuncD, EventE1);
    bindFunctionToEvent(DE.FuncE, EVentE1);
    ...
}
```

Figure 5: General Structure of a Function Diagram.

- a shadowed box is a subsystem, consisting of multiple RSL objects and operations or multiple C++ classes
- a box is a datatype, which is either an RSL object or a C++ class
  - *o* the second and third parts of a three-part box represent the components and operations attributes of an RSL object or the data and function members of a C++ class;

- *o* a hollow triangle connecting boxes abstractly represents inheritance in either RSL or C++;
- *o* a hollow diamond connecting boxes represents component-of in RSL and membership in C++

- a circle is an RSL (functional) operation
- a rounded rectangle is a C++ (imperative) function

The uniqueness of shapes allows diagram elements to be combined in ways not fully supported in UML, but which is conceptually compatible with UML. In particular, the appearance of rounded rectangles in data diagrams depicts function membership in a form not directly supported in UML.

The current version of UML supports neither dataflow nor function diagrams in the forms defined above. UML does support state-transition diagrams that have similar semantics to dataflow diagrams. In a state-transition, nodes are shown as rounded rectangles. This may cause some confusion with our use of rounded rectangles for functions. However, the edge shape in a UML state transition diagram is different than in a function diagram, so that the two forms of diagram can be immediately distinguished.

It should be noted that all of the above notations except for function diagrams are orientation independent. That is, diagrams can be drawn vertically, horizontally, or any combination of orientations. The restriction for function diagrams is that a calling function must be drawn above or to the left of the functions that it calls.